Tolomatic™
EXCELLENCE *IN MOTION*

ENDURANCE TECHNOLOGY℠
A Tolomatic Design Principle

RSH ELECTRIC HYGIENIC ROD-STYLE ACTUATOR

PATENT PENDING

LINEAR SOLUTIONS MADE EASY

RSH – Hygienic Electric Rod-Style Actuator

All 316 stainless steel construction and IP69K environmental rating make the RSH Hygienic rod-style actuators ideal for food, beverage, and pharmaceutical automation machinery.

Designed to Meet Hygienic Guidelines for:

- **USDA**
- **BISSC**
- **EHEDG**
- **NSF/3-A**

TOLOMATIC'S ELECTRIC ROD-STYLE ACTUATORS

	ERD	RSH	RSA	GSA	RSX	IMA S
				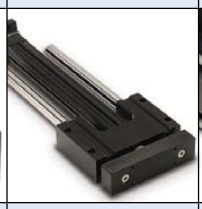		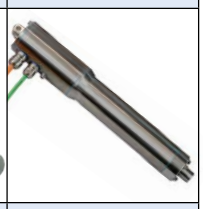
	Rod-Style Actuator	Hygienic Rod-Style Actuator	Rod-Style Actuator	Guided Rod-Style Actuator	Rod-Style Actuator	Stainless Integrated Servo Actuator
Force up to:	2.22 kN *(500 lbf)*	35.3 kN *(7,943 lbf)*	58 kN *(13,039 lbf)*	4.23 kN *(950 lbf)*	222.4 kN *(50,000 lbf)*	2.5 kN *(2,500 lbf)*
Speed up to:	1473 mm/sec *(58 in/sec)*	500 mm/sec *(19.7 in/sec)*	3,124 mm/sec *(123 in/sec)*	3,124 mm/sec *(123 in/sec)*	760 mm/sec *(29.9 in/sec)*	500 mm/sec *(19.6 in/sec)*
Stroke Length up to:	609.6 mm *(24 in)*	1200 mm *(48 in)*	1,524 mm *(60 in)*	914 mm *(36 in)*	890 mm *(35 in)*	457 mm *(18 in)*
Screw/ Nut Type	Solid & Ball	Ball & Roller	Solid, Ball & Roller	Solid & Ball	Roller	Ball & Roller
	For complete information see www.tolomatic.com or literature number:					
Literature Number:	2190-4000	2100-4010	3600-4166	3600-4166	2171-4001	2700-4014

(Not all models deliver maximum values listed, i.e.: Maximum thrust may not be available with maximum speed)

RSH – Improving upon the ERD Hygienic

Features: **ERD**

THREADED ROD END
•Compatible with many commercially available metric rod end accessories

•Standard metric threads

GREASE PORT
•Screw re-lubrication system provides extended screw life

•Convenient lubrication without disassembly

SMOOTH EXTERIOR
Polished, contoured mating surface designed to provide IP69K seal for today's hygienic servo motors

WELDED SEAMS
Leaving no gaps which eases cleanup and helps to prevent bacterial growth

STATIC IP69K OPTION
•To withstand high-pressure wash-down

•Clean-in-place compatible

BREATHER/PURGE PORT
Helps prevent contaminants from entering into actuator

Improvements: **RSH**

FRONT FACE SEALING O-RING
Hygienic design from head to toe

THREADED ROD END
•Compatible with many commercially available metric rod end accessories

•Standard metric threads

GREASE PORT
•Screw re-lubrication system provides extended screw life

•Convenient lubrication without disassembly

CARTRIDGE W/ REPLACEABLE SEALS
Quick seal cartridge replacement without special tools

DUAL SEAL SYSTEM
Use the dual seal system that provides the longest life in your application

ALL POLISHED 316 STAINLESS STEEL WITH SMOOTH EXTERIOR
•316 series stainless steel for corrosion resistance

•Simplifies and lowers cost of machine design by eliminating the need for protective guards around standard actuators

WELDED SEAMS
Leaving no gaps which eases cleanup and helps to prevent bacterial growth

STATIC IP69K RATED (STANDARD)
•To withstand high-pressure wash-down

•Clean-in-place compatible

HYGIENIC BREATHER/PURGE PORT
Helps prevent contaminants from entering into actuator

HYGIENIC STAINLESS STEEL FASTENERS
•Standard metric threads

•Hex fasteners for sturdy construction without potential particle collection areas

•Included for your motor: EHEDG compliant 316 stainless seal sealed bolts

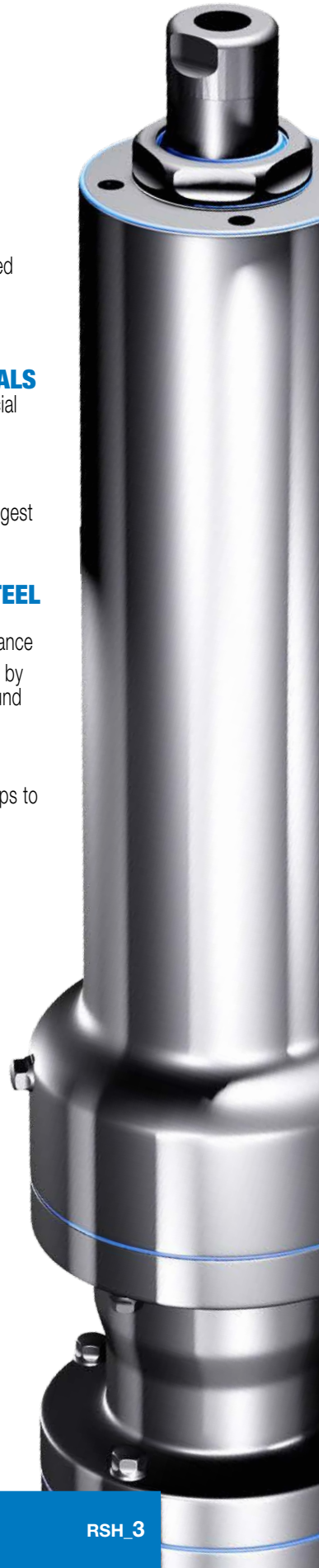

RSH HYGIENIC ELECTRIC ROD STYLE ACTUATOR

ENDURANCE TECHNOLOGY℠

A Tolomatic Design Principle

Endurance Technology features are designed for maximum durability to provide extended service life.

The all 316 series stainless-steel RHS Hygienic Electric Rod Style Actuator incorporates hygienic design principles and has an IP69K rating (static). Available in 22, 25 & 30 sizes, the RSH is built-to-order in stroke lengths up to 1.219 m (48") with force up to 35.3 kN (7,943 lbf).

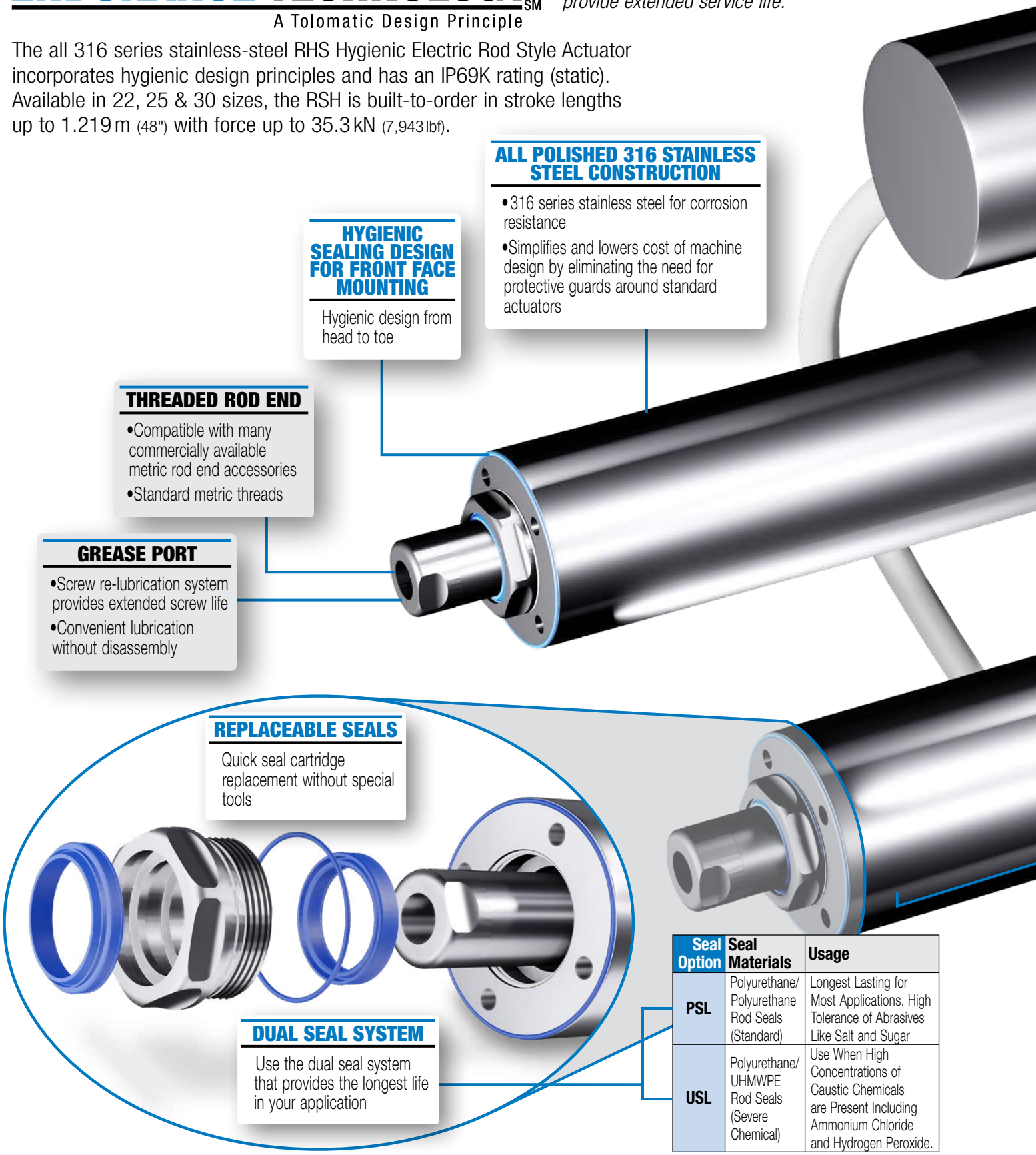

Seal Option	Seal Materials	Usage
PSL	Polyurethane/ Polyurethane Rod Seals (Standard)	Longest Lasting for Most Applications. High Tolerance of Abrasives Like Salt and Sugar
USL	Polyurethane/ UHMWPE Rod Seals (Severe Chemical)	Use When High Concentrations of Caustic Chemicals are Present Including Ammonium Chloride and Hydrogen Peroxide.

Tolomatic™ EXCELLENCE IN MOTION . . . MAXIMUM DURABILITY

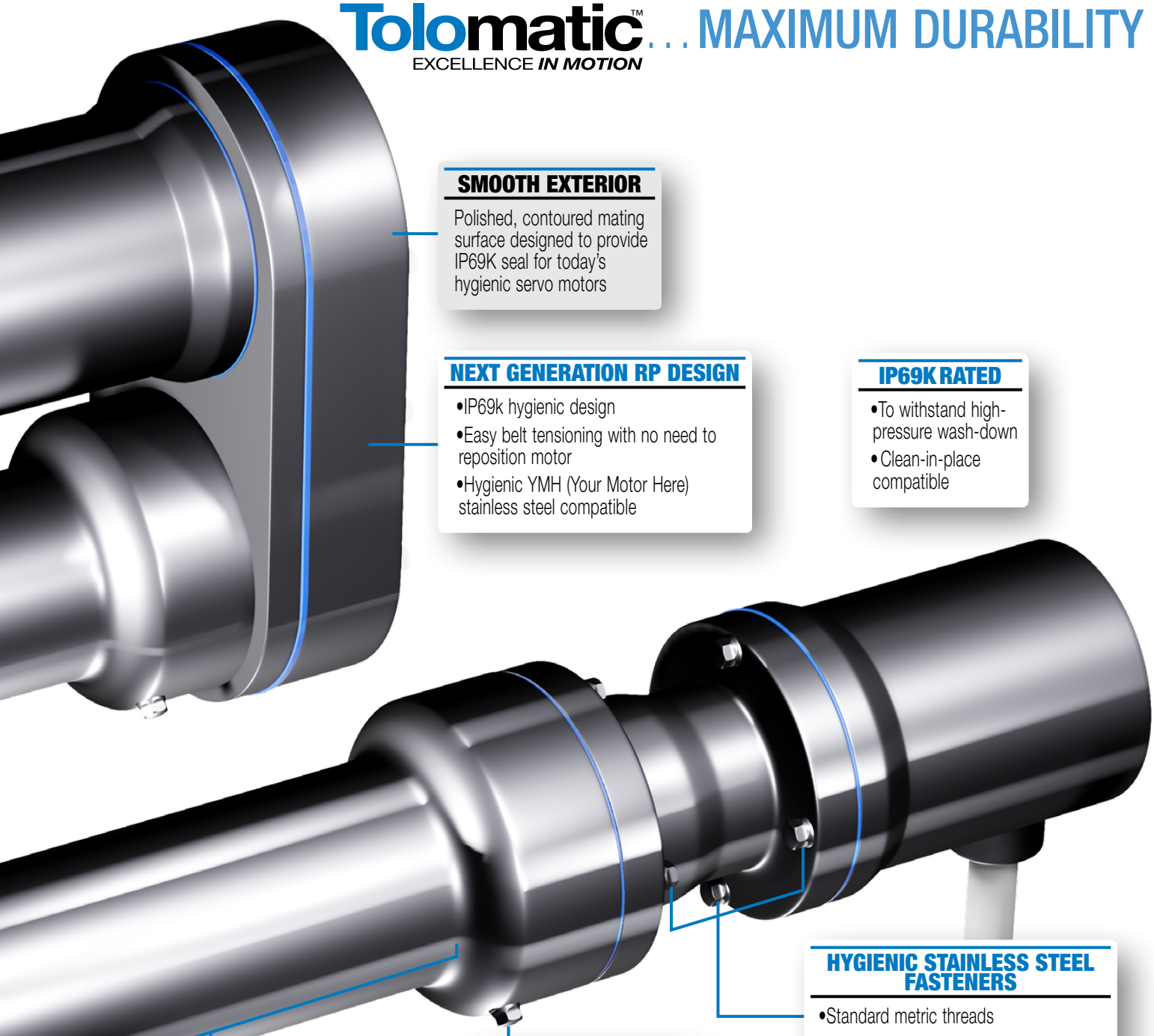

SMOOTH EXTERIOR

Polished, contoured mating surface designed to provide IP69K seal for today's hygienic servo motors

NEXT GENERATION RP DESIGN

- IP69k hygienic design
- Easy belt tensioning with no need to reposition motor
- Hygienic YMH (Your Motor Here) stainless steel compatible

IP69K RATED

- To withstand high-pressure wash-down
- Clean-in-place compatible

HYGIENIC STAINLESS STEEL FASTENERS

- Standard metric threads
- Hex fasteners for sturdy construction without potential particle collection areas
- Included for your motor: EHEDG compliant 316 stainless seal sealed bolts

HYGIENIC BREATHER/ PURGE PORT

Helps prevent contaminants from entering into actuator

WELDED SEAMS

Leaving no gaps which eases cleanup and helps to prevent bacterial growth

POLISHED EXTERIOR

Polished surface finish reduces bacterial growth and meets hygienic design guidelines.

MULTIPLE SCREW TECHNOLOGIES

ROLLER NUT	BALL NUT
Roller nuts provide the highest thrust and life ratings available 	Ball nuts offer efficiency at a cost effective price 
SCREW ACCURACY	**SCREW ACCURACY**
± 0.0102mm/300mm; ± 0.0004"/ft.	*± 0.051mm/300mm; ± 0.002"/ft.*

SPECIFICATIONS (US conventional measurement)

RSH SIZE	MAXIMUM STROKE*	SCREW CODE	LEAD	LEAD ACCURACY	BACKLASH	MAXIMUM THRUST	DYNAMIC LOAD RATING	INERTIA LMI Base	INERTIA RP Base	INERTIA Per Inch	WEIGHT LMI Base	WEIGHT RP Base	WEIGHT Per Inch
	in		in/rev	in/ft	in	lbf	lbf	lb-in^2	lb-in^2	lb-in^2	lb	lb	lb
22	39.4	BNM05	0.197	0.004	0.003	1700	3080	0.776	0.410	0.009	11.6	18.9	0.45
	39.4	BNM10	0.394	0.004	0.003	1700	4721	0.778	0.412	0.010	11.5	18.9	0.45
	39.4	BNM20	0.787	0.004	0.003	1000	2248	0.781	0.415	0.011	11.6	18.9	0.45
	24	RN04	0.157	0.0004	0.0012	1700	6409	0.758	0.392	0.004	12.5	19.9	0.38
	24	RN05	0.197	0.0004	0.0012	1700	6409	0.758	0.392	0.004	12.5	19.9	0.38
	24	RN10	0.394	0.0004	0.0012	1556	6409	0.758	0.392	0.004	12.5	19.9	0.38
25	39.4	BN04	0.250	0.004	0.015	2846	3250	7.820	3.433	0.028	34.8	40.2	0.84
	39.4	BNM05	0.197	0.002	0.0024	2000	3777	7.795	3.408	0.022	34.3	39.7	0.82
	39.4	BNM10	0.394	0.002	0.0031	1750	5171	7.795	3.408	0.022	34.7	40.1	0.82
	39.4	BNM25	0.984	0.004	0.0031	700	4496	7.804	3.417	0.024	34.5	39.9	0.83
	36	RN04	0.157	0.0004	0.0012	4159	12917	7.742	3.355	0.010	36.8	42.2	0.79
	36	RN05	0.197	0.0004	0.0012	3878	12917	7.742	3.355	0.010	36.8	42.2	0.79
	36	RN10	0.394	0.0004	0.0012	4159	12917	7.745	3.358	0.011	36.8	42.2	0.79
30	48	BN04	0.250	0.004	0.015	4500	4250	8.435	4.053	0.141	41.2	46.6	1.30
	48	BNM05	0.197	0.001	0.0024	3000	5598	8.504	4.122	0.155	42.3	47.7	1.32
	48	BNM10	0.394	0.002	0.0031	2950	9757	8.428	4.046	0.140	43.7	49.1	1.32
	48	BNM20	0.787	0.002	0.0031	1848	9622	8.429	4.047	0.140	41.8	47.2	1.32
	48	RN05	0.197	0.0004	0.0012	7868	12917	8.018	3.636	0.057	43.5	48.9	1.16
	48	RN10	0.394	0.0004	0.0012	7943	12917	8.032	3.650	0.060	43.5	48.9	1.16

**Standard Temperature range	-4° to 104° F *(-20° to 40° C)*
IP rating	**69k** (static) standard for 22, 25, 30 sizes

****Contact Tolomatic to review application for operations outside the standard temperature range.**

SIDE LOAD CONSIDERATIONS

The standard RSH rod-style actuator is not meant to be used in applications where side loading occurs.

Loads must be guided and supported. Loads should be aligned with the line of motion of the thrust rod.

Side loading will affect the life of the actuator.

SCREW CODE	DESCRIPTION
BN	Ball Nut
BNM	Ball Nut Metric
RN	Roller Nut

SPECIFICATIONS (metric measurement)

RSH SIZE	MAXIMUM STROKE*	SCREW CODE	LEAD	LEAD ACCURACY	BACKLASH	MAXIMUM THRUST	DYNAMIC LOAD RATING	INERTIA LMI Base	INERTIA RP Base	INERTIA Per 25mm	WEIGHT LMI Base	WEIGHT RP Base	WEIGHT Per 25mm
	mm		mm/rev	mm/300mm	mm	N	N	kg-m² x 10⁻⁶	kg-m² x 10⁻⁶	kg-m² x 10⁻⁶	kg	kg	kg
22	1000.0	BNM05	5.0	0.10	0.07	7562	13700	227.26	120.04	2.66	5.3	8.6	0.01
	1000.0	BNM10	10.0	0.10	0.07	7562	21000	227.82	120.60	2.84	5.2	8.6	0.01
	1000.0	BNM20	20.0	0.10	0.07	4448	10000	228.89	121.67	3.14	5.3	8.6	0.01
	609.6	RN04	4.0	0.01	0.03	7562	28509	221.95	114.74	1.07	5.7	9.0	0.01
	609.6	RN05	5.0	0.01	0.03	7562	28509	221.96	114.74	1.07	5.7	9.0	0.01
	609.6	RN10	10.0	0.01	0.03	6921	28509	221.98	114.76	1.07	5.7	9.0	0.01
25	1000.0	BN04	6.4	0.10	0.38	12659	14456	2291.38	1005.99	8.15	15.8	18.2	0.02
	1000.0	BNM05	5.0	0.05	0.06	8896	16800	2283.96	998.56	6.51	15.6	18.0	0.01
	1000.0	BNM10	10.0	0.05	0.06	7784	23000	2283.99	998.60	6.51	15.7	18.2	0.01
	1000.0	BNM25	25.0	0.10	0.08	3114	20000	2286.68	1001.29	7.07	15.6	18.1	0.01
	914.4	RN04	4.0	0.01	0.03	18499	57456	2268.34	982.95	3.02	16.7	19.1	0.01
	914.4	RN05	5.0	0.01	0.03	17249	57456	2268.35	982.96	3.02	16.7	19.1	0.01
	914.4	RN10	10.0	0.01	0.03	18499	57456	2269.17	983.78	3.18	16.7	19.1	0.01
30	1219.2	BN04	6.4	0.10	0.38	20016	18904	2471.55	1187.63	41.29	18.7	21.1	0.02
	1219.2	BNM05	5.0	0.02	0.06	13344	24900	2491.73	1207.81	45.33	19.2	21.6	0.02
	1219.2	BNM10	10.0	0.05	0.08	13122	43400	2469.37	1185.45	41.02	19.8	22.3	0.02
	1219.2	BNM20	20.0	0.05	0.08	8220	42800	2469.58	1185.65	41.04	19.0	21.4	0.02
	1219.2	RN05	5.0	0.01	0.03	34997	57456	2349.33	1065.40	16.78	19.7	22.2	0.02
	1219.2	RN10	10.0	0.01	0.03	35330	57456	2353.24	1069.32	17.55	19.7	22.2	0.02

What is an IP Rating?
The IP Code (or Ingress Protection Rating) consists of the letters IP followed by two digits and an optional letter. As defined in international standard IEC 60529, it classifies the degrees of protection provided against the intrusion of solid objects (including body parts like hands and fingers), dust, accidental contact, and water in electrical enclosures.

The IP69K test specifies a spray nozzle that is fed with 80°C water at 8–10MPa (80–100bar) and a flow rate of 14–16L/min. The nozzle is held 10–15 cm from the tested device at angles of 0°, 30°, 60° and 90° for 30s each. The test device sits on a turntable that rotates once every 12s (5rpm).

SOLIDS, FIRST DIGIT:		
6	Dust tight	No ingress of dust; complete protection against solid object intrusion
LIQUIDS, SECOND DIGIT (static rating)		
9K	High pressure, high temp. wash-down	As above, plus ingress of water in harmful quantity shall not be possible when the enclosure is subject to high pressure, high temperature wash-down.

What Does IP69K mean?
German standard DIN 40050-9 extends the IEC 60529 rating system described above with an IP69K rating for high-pressure, high-temperature wash-down applications.[4] Such enclosures must not only be dust tight (IP6X), but also able to withstand high-pressure and steam cleaning.

The first digit indicates the level of protection that the enclosure provides against access to hazardous parts (e.g., electrical conductors, moving parts) and the ingress of solid foreign objects.

The second digit indicates the level of protection that the enclosure provides against harmful ingress of water.

SIZE: **RSH22**

SPECIFICATIONS

CRITICAL SPEED CAPACITY (NOTE: Max.19.6 in/sec critical speed is limited by the seal not the screw)

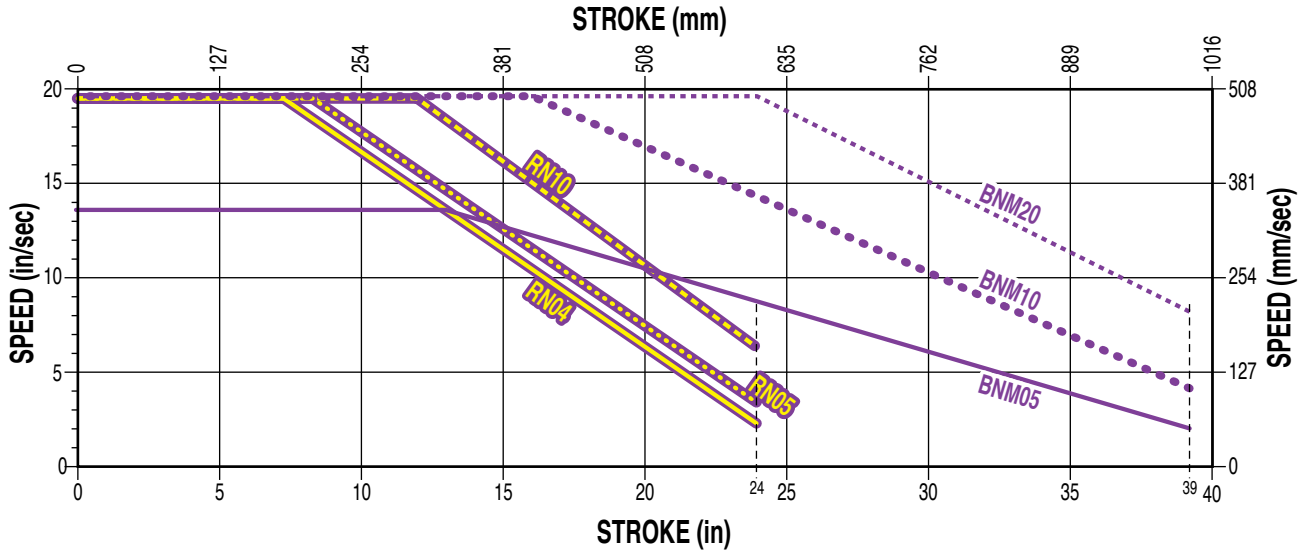

MAXIMUM THRUST vs STROKE

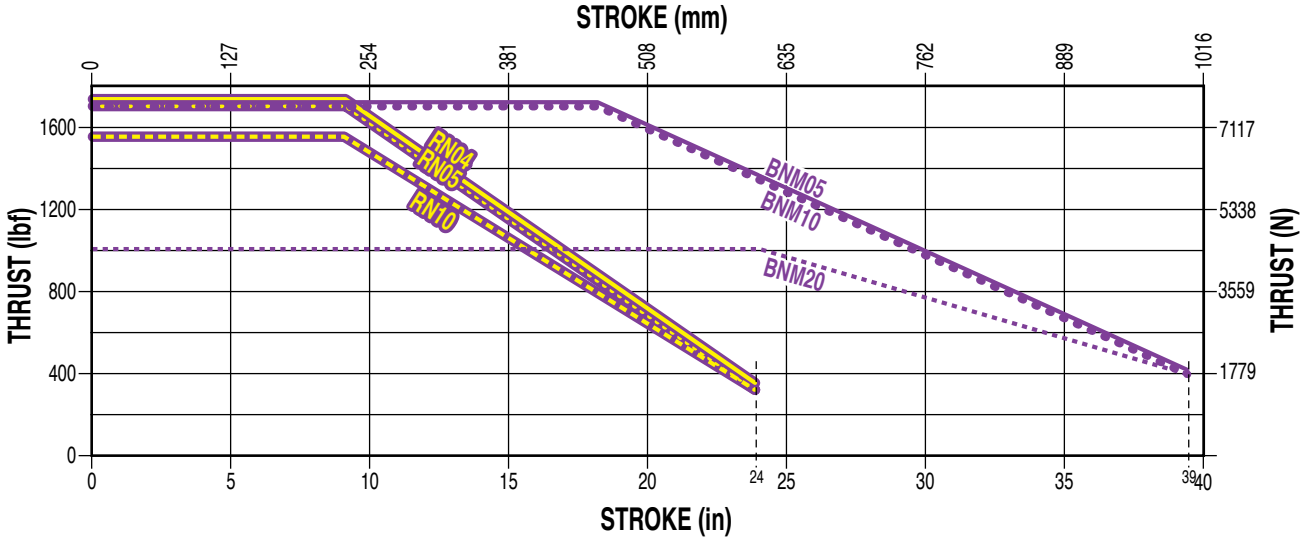

SCREW LIFE

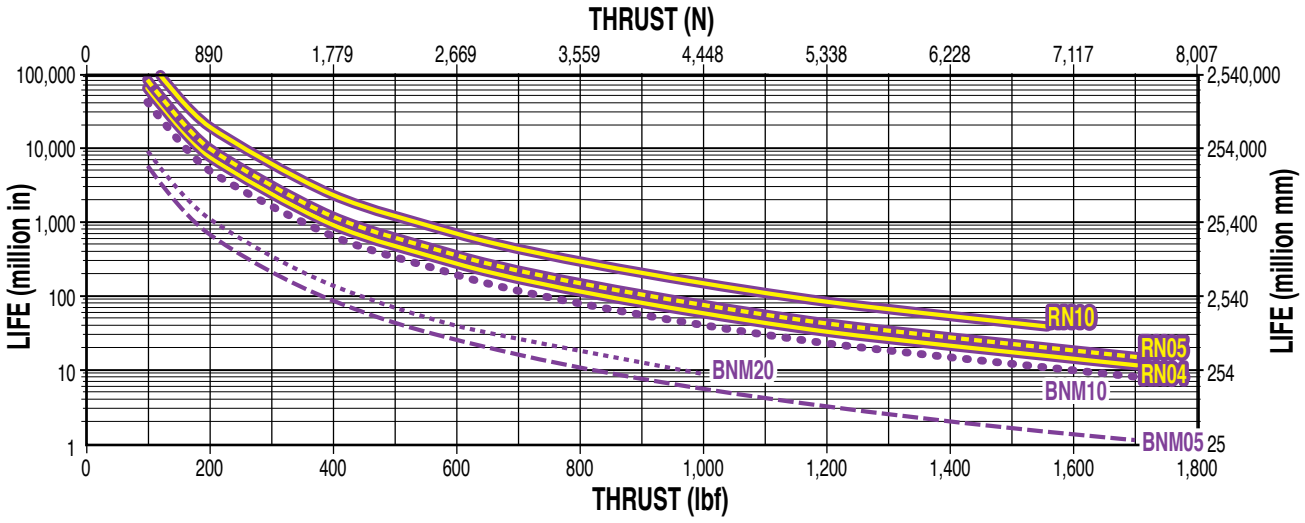

SIZE: **RSH25**

SPECIFICATIONS

CRITICAL SPEED CAPACITY (NOTE: Max.19.6 in/sec critical speed is limited by the seal not the screw)

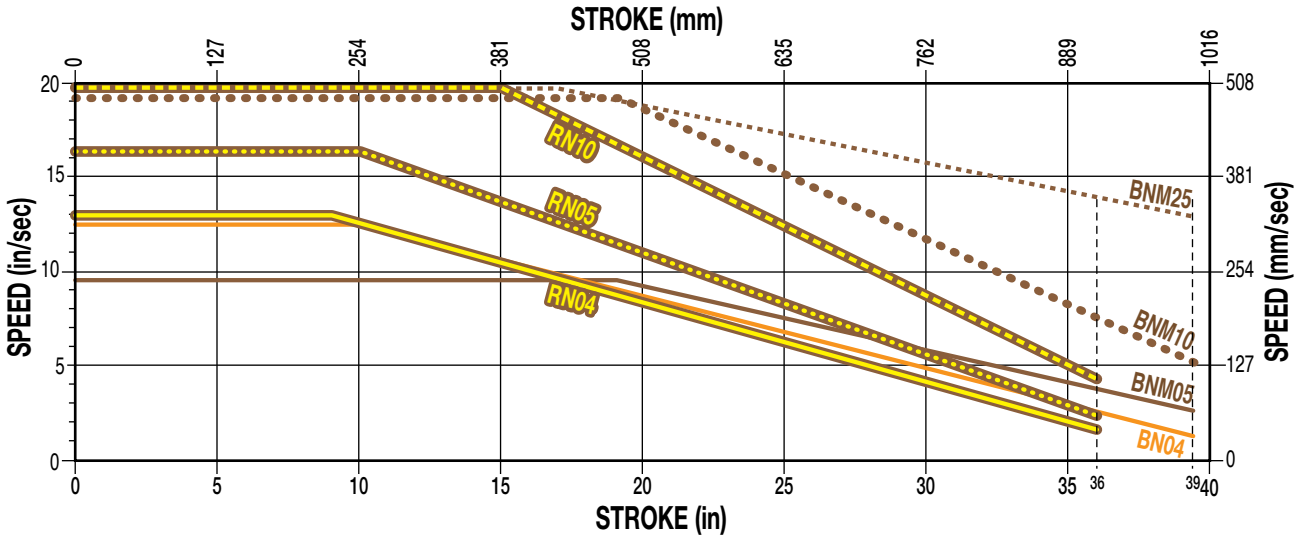

MAXIMUM THRUST vs STROKE

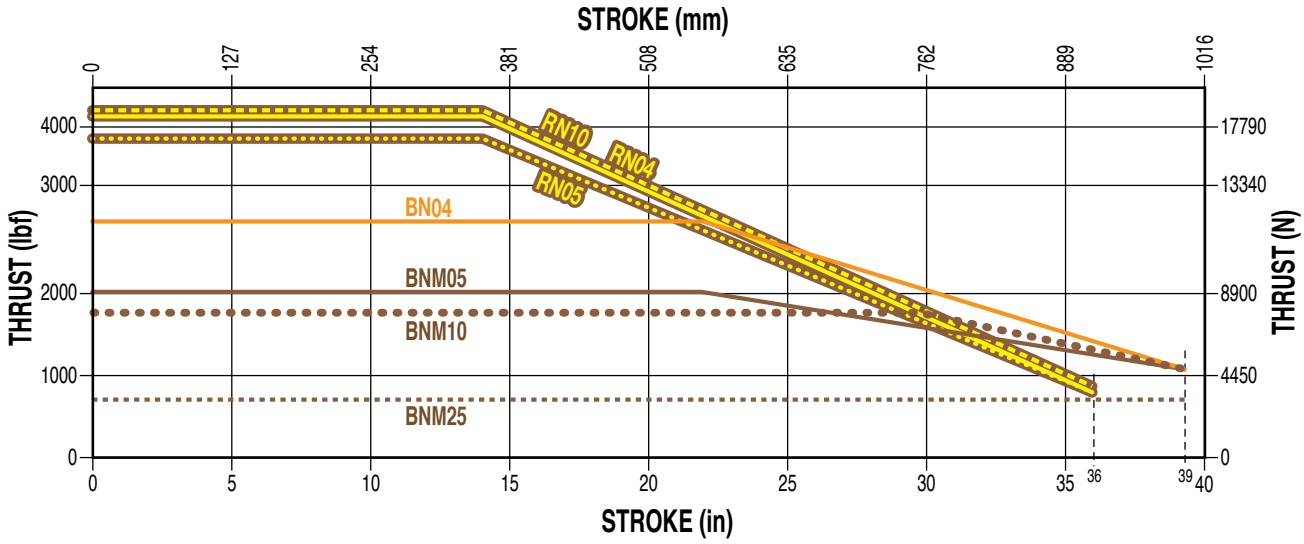

SCREW LIFE

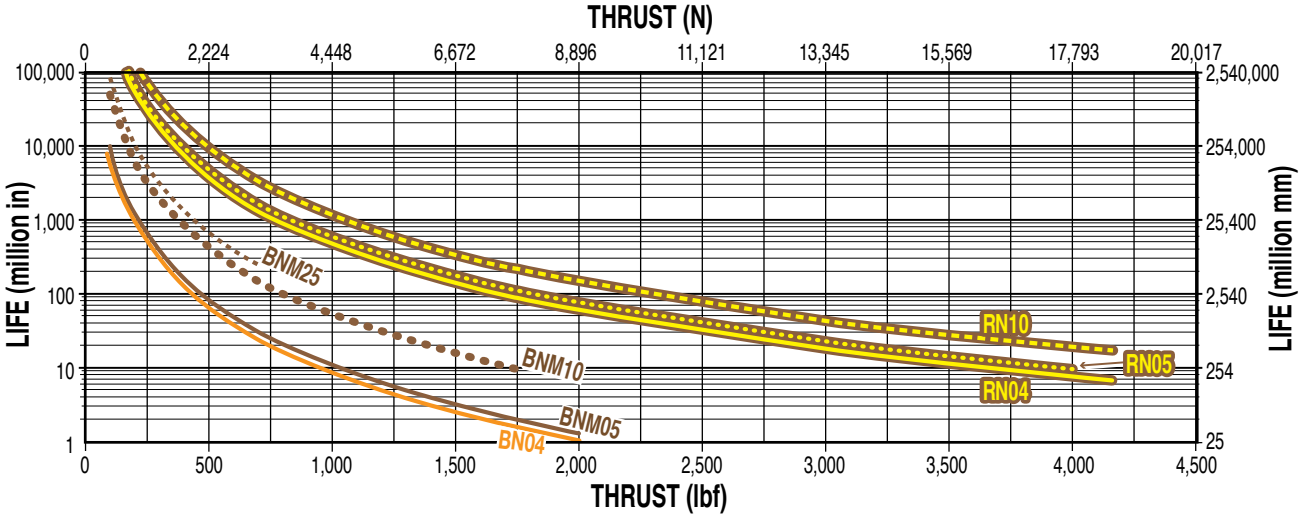

SIZE: **RSH30**

SPECIFICATIONS

CRITICAL SPEED CAPACITY (NOTE: Max.19.6 in/sec critical speed is limited by the seal not the screw)

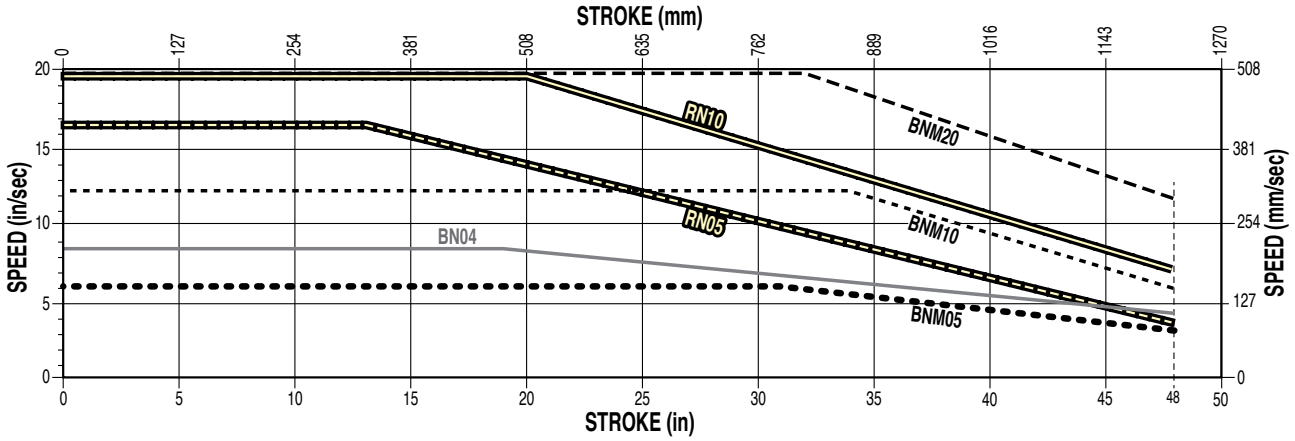

MAXIMUM THRUST vs STROKE

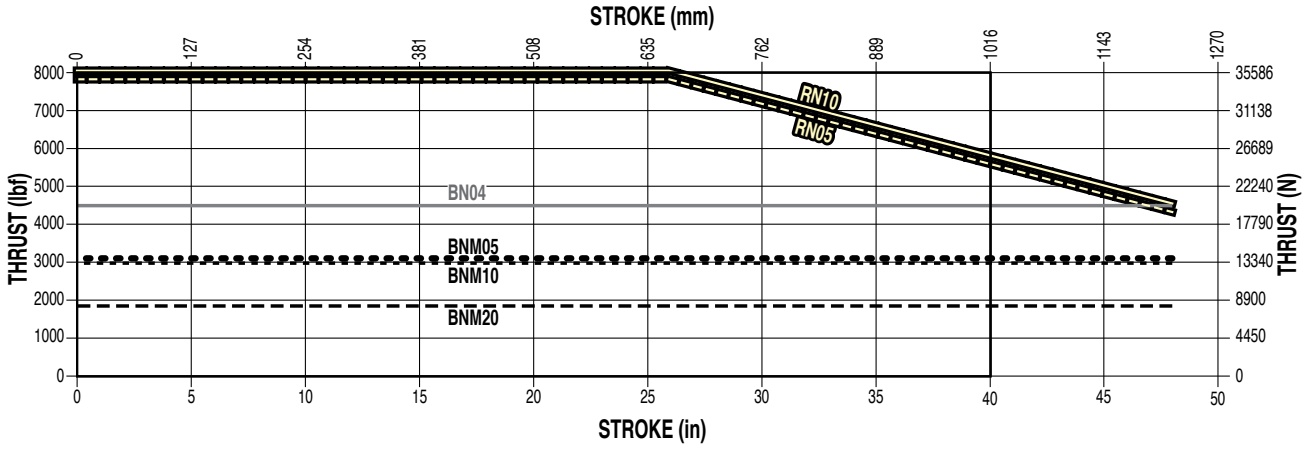

SCREW LIFE

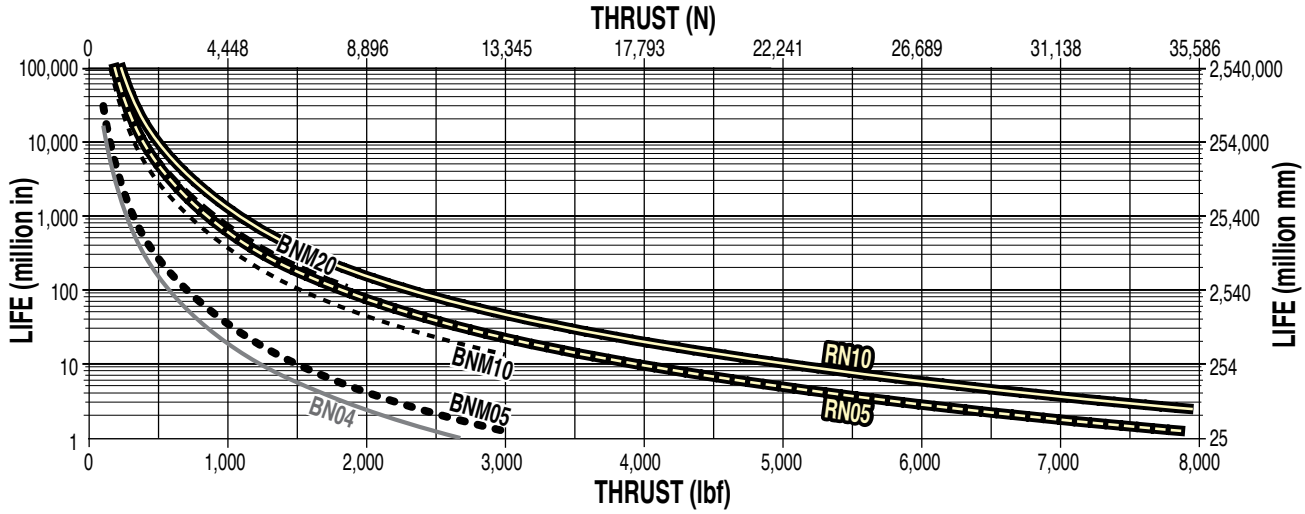

RE-LUBRICATION RECOMMENDATION:

RSH22, RSH25, RSH30: RSH Lubrication requirements for electric actuators depend on the motion cycle (velocity, force, duty cycle), type of application, ambient temperature, environmental surrounding and various other factors. For many general purpose applications, Tolomatic ball screw actuators are typically considered lubricated for life unless otherwise specified, such as those actuator models outfitted with a re-lubrication feature. For roller screw or ball screw actuators outfitted with a re-lubrication feature, Tolomatic recommends to re-lubricate the actuator at least once per year or every 1,000,000 cycles, whichever comes first, to maximize service life. For more demanding applications such as pressing, high frequency or other highly stressed applications, the re-lubrication interval for these actuators will vary and will need to be more frequent. In these demanding applications, it is recommended to execute at least 5 full stroke moves every 5,000 cycles of operation (or more frequent if possible) to re-distribute the grease within the actuator.

Re-lubricate with Tolomatic Grease into the grease zerk located in the rod end.

	RSH22	RSH25	RSH30
Qty.	2.5 g + (0.010 x § mm)	4.8 g + (0.010 x § mm)	5.3 g + (0.018 x § mm)
Qty.	0.09 oz + (0.009 x § in)	0.17 oz + (0.009 x § in)	0.19 oz + (0.016 x § in)

§ = Stroke length (mm or in)

In some applications oil may leak from the grease zerk. In contamination sensitive applications replace grease zerk with plug.

USE THE TOLOMATIC SIZING AND SELECTION SOFTWARE AVAILABLE ON-LINE AT www.tolomatic.com OR... CALL TOLOMATIC AT 1-800-328-2174. We will provide any assistance needed to determine the proper actuator for the job.

MOTOR CHOICES - YOUR MOTOR HERE

ADD ANY MOTION SYSTEM TO OUR ACTUATORS

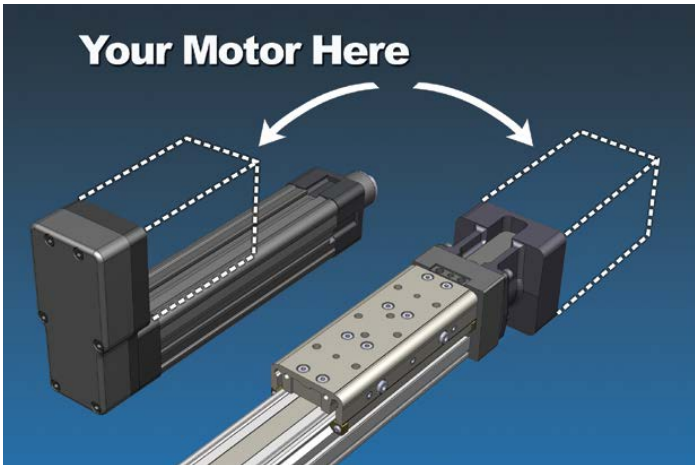

"YOUR MOTOR HERE" MADE-TO-ORDER MOTOR MOUNTS.

Select a high-performance Tolomatic electric actuator and we'll provide a motor-specific interface for your motor. With our online database, you can select from several stainless steel motor manufacturers and models.

Visit **www.tolomatic.com/ymh** to find your motor/actuator match!

The RSH utilizes Tolomatic's YMH (Your Motor Here) program. See www.tolomatic.com/ymh or consult Tolomatic sales at 1-800-328-2174 for details.

Configure an actuator and a complete motion control system today using Tolomatic's easy-to-use on-line sizing & selection

ACTUATOR SIZING *Available FREE at www.tolomatic.com*

RSH – Hygienic Electric Rod-Style Actuator

SIZE: **22, 25, 30**

3D CAD available at www.tolomatic.com
Always use configurated CAD solid model to determine critical dimensions

DIMENSIONS

DIMENSIONS WITH AN "*" ARE DEPENDANT ON MOTOR CHOICE

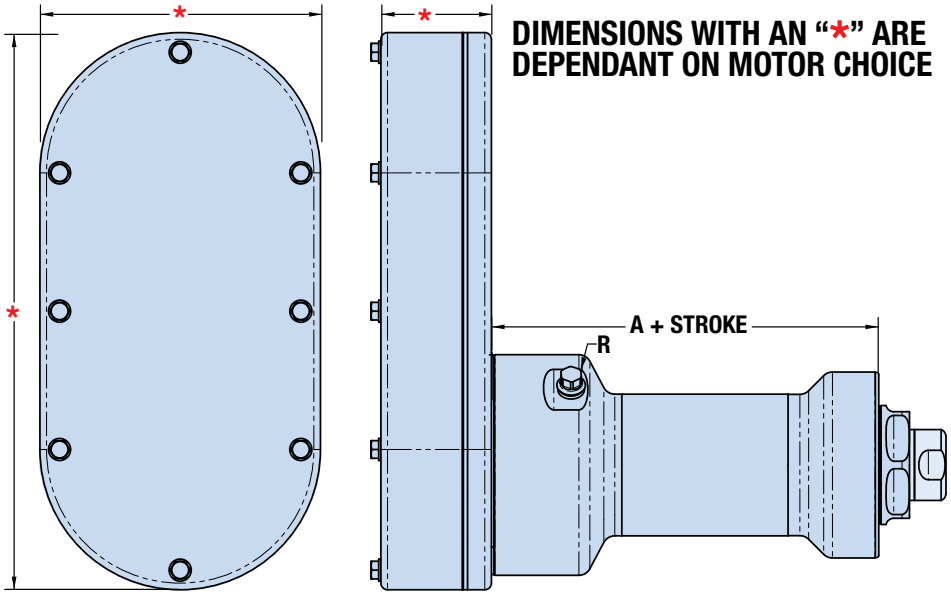

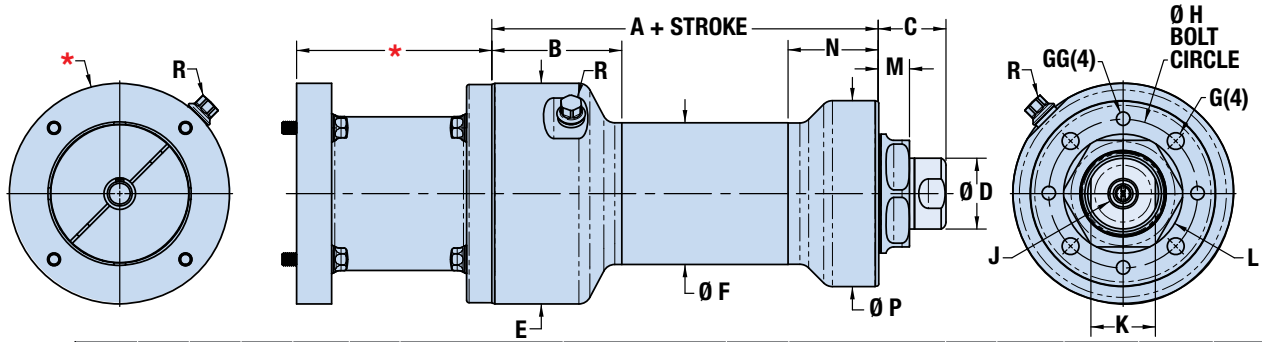

	A	B	C	Ø D	Ø E	Ø F	G	GG	Ø H	J	K	L	M	N	Ø P
RSH22	155.9	52.4	27.3	28.6	89.0	57.2	M8x1.25 ↧16.0	M6x1.0 ↧12.0	60.00	M12x1.25↧22.2	26.0	48.00 47.95	12.6	36.4	75.0
RSH25	211.2	68.5	35.3	35.0	125.0	89.0	M10x1.50 ↧20.0	M8x1.25 ↧16.0	70.00	M20x1.5 ↧25.4	30.0	56.00 55.95	13.3	47.2	89.0
RSH30	237.2	68.5	35.3	54.0	125.0	89.0	M12x1.75 ↧24.0	M10x1.50 ↧24.0	94.00	M27x2.0 ↧33.0	50.0	78.00 77.95	13.8	54.0	114.0

Dimensions in millimeters

R	M5x0.8x10 plug

	A	B	C	Ø D	Ø E	Ø F	G	GG	Ø H	J	K	L	M	N	Ø P
RSH22	*6.14*	*2.06*	*1.08*	*1.13*	*3.50*	*2.25*	M8 x 1.25 ↧*0.63"*	M6 x 1.0 ↧*0.47"*	*2.362*	M12x1.25↧*0.87"*	*1.02*	*1.890* *1.888*	*0.50*	*1.43*	*2.95*
RSH25	*8.31*	*2.70*	*1.39*	*1.38*	*4.92*	*3.50*	M10x1.50 ↧*0.79"*	M8x1.25 ↧*0.63"*	*2.756*	M20x1.5 ↧*1.00"*	*1.18*	*2.205* *2.203*	*0.52*	*1.86*	*3.50*
RSH30	*9.34*	*2.70*	*1.39*	*2.13*	*4.92*	*3.50*	M12x1.75 ↧*0.95"*	M10x1.50 ↧*0.79"*	*3.701*	M27x2.0 ↧*1.30"*	*1.97*	*3.071* *3.069*	*0.55*	*2.13*	*4.49*

Dimensions in inches

RSH – Hygienic Electric Rod-Style Actuator

SIZE: **22, 25, 30**

3D CAD available at www.tolomatic.com
Always use configurated CAD solid model to determine critical dimensions

DIMENSIONS

FFG - FRONT FLANGE MOUNT OPTION

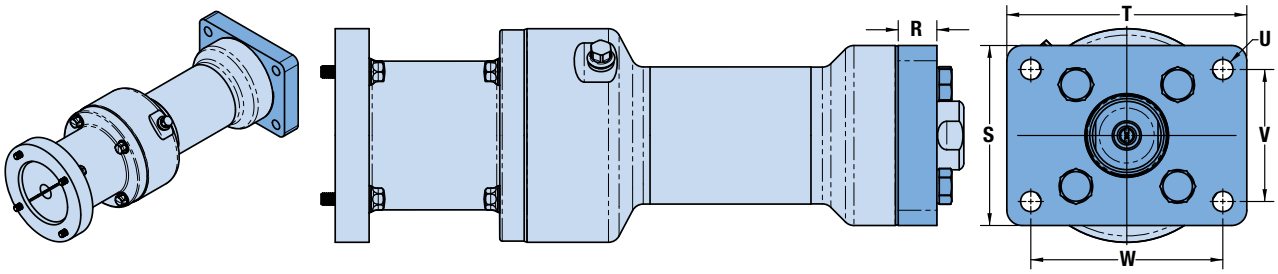

	R	S	T	U	V	W
RSH22	10.2	69.9	98.6	7.1	50.8	76.2
RSH25	15.7	120.7	158.8	10.7	84.3	138.2
RSH30	15.7	120.7	158.8	10.7	84.3	138.2

Dimensions in millimeters

	R	S	T	U	V	W
RSH22	0.40	2.75	3.88	0.28	2.00	3.00
RSH25	0.62	4.75	6.25	0.42	3.32	5.44
RSH30	0.62	4.75	6.25	0.42	3.32	5.44

Dimensions in inches

FM2 - FOOT MOUNT OPTION

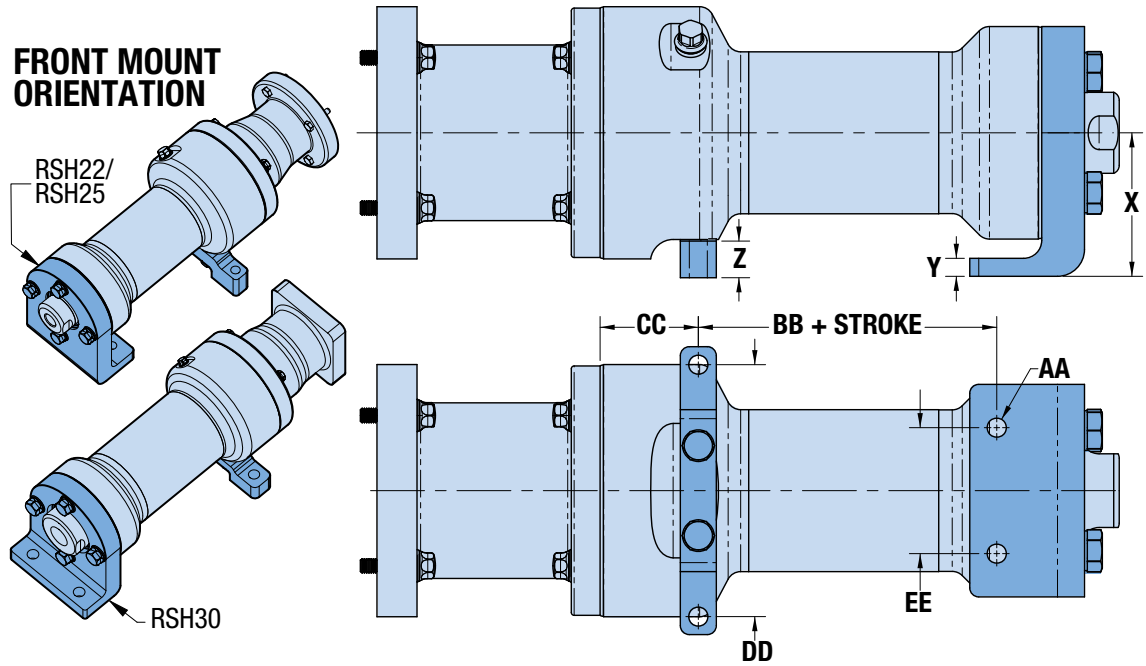

	X	Y	Z	Ø AA	BB	CC	DD	EE
RSH22	64.0	9.5	21.0	7.1	109.5	32.9	88.9	44.5
RSH25	79.9	12.7	20.0	12.0	154.0	38.6	120.7	69.9
RSH30	79.9	15.9	20.0	12.0	239.0	38.6	120.7	69.9

Dimensions in millimeters

	X	Y	Z	Ø AA	BB	CC	DD	EE
RSH22	2.52	.38	.83	.28	4.31	1.29	3.50	1.75
RSH25	3.15	.50	.79	.47	6.06	1.52	4.75	2.75
RSH30	3.15	.63	.79	.47	9.41	1.52	4.75	2.75

Dimensions in inches

RSH – Hygienic Electric Rod-Style Actuator

SIZE: **22, 25, 30**

3D CAD available at www.tolomatic.com
Always use configurated CAD solid model to determine critical dimensions

DIMENSIONS

TRR/TRM - TRUNNION MOUNT OPTION

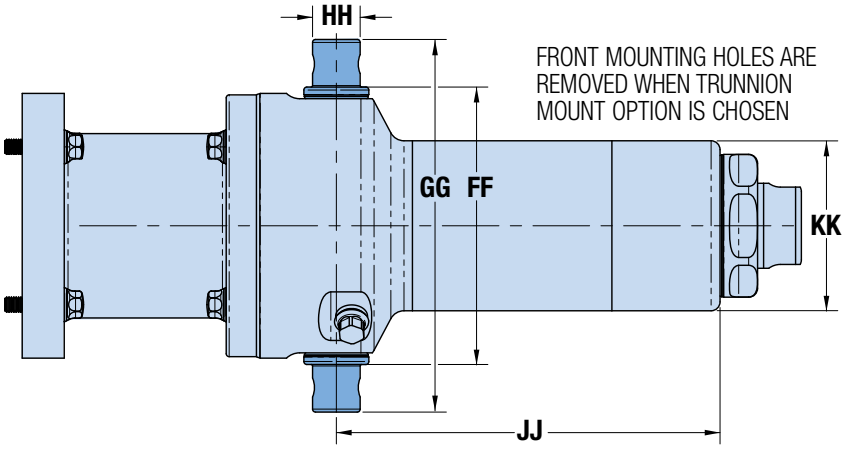

FRONT MOUNTING HOLES ARE REMOVED WHEN TRUNNION MOUNT OPTION IS CHOSEN

TRUNNIONS ARE MADE OF 17-4 H900 STAINLESS INSTEAD OF 316 STAINLESS FOR INCREASED HARDNESS

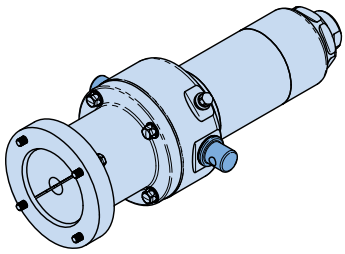

TRM	FF	GG	Ø HH		JJ	KK
RSH22	93.3	125.3	16.00	15.97	132.0	57.2
RSH25	128.3	182.1	25.00	24.98	179.0	89.0
RSH30	128.3	182.1	25.00	24.98	205.0	89.0

Dimensions in millimeters

TRR	FF	GG	Ø HH		JJ	KK
RSH22	*3.67*	*4.93*	*0.625*	*0.624*	*5.20*	*2.25*
RSH25	*5.05*	*7.17*	*1.000*	*0.999*	*7.05*	*3.50*
RSH30	*5.05*	*7.17*	*1.000*	*0.999*	*8.07*	*3.50*

Dimensions in inches

RSH TO ERD MOUNT OPTION

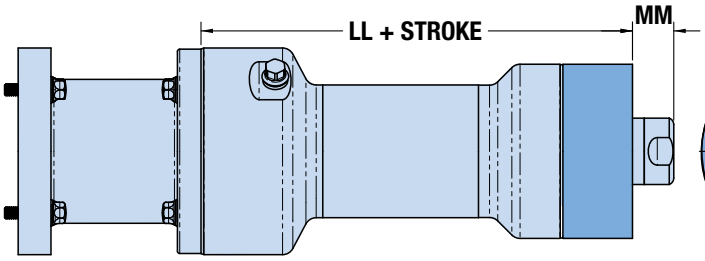

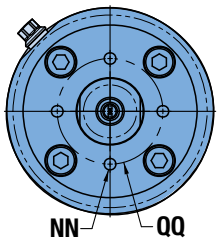

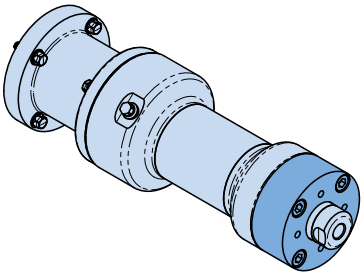

	LL	MM	NN	ØQQ
RSH22	185.8	17.8	M6x1.0 x ↧12.0	45.50
RSH25	237.2	17.8	M8x1.25 x ↧16.0	76.20
RSH30	272.7	23.9	M8x1.25 x ↧16.0	76.20

Dimensions in millimeters

	LL	MM	NN	Ø QQ
RSH22	*7.32*	*0.70*	M6x1.0 x ↧*0.47*	*1.791*
RSH25	*9.34*	*0.94*	M8x1.25 x ↧*0.63*	*3.000*
RSH30	*10.74*	*0.94*	M8x1.25 x ↧*0.63*	*3.000*

Dimensions in inches

MET/IET - EXTERNALLY THREADED ROD END OPTION

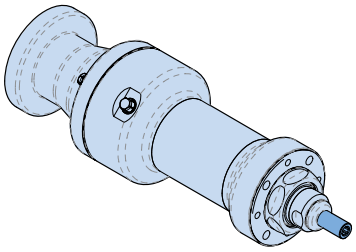

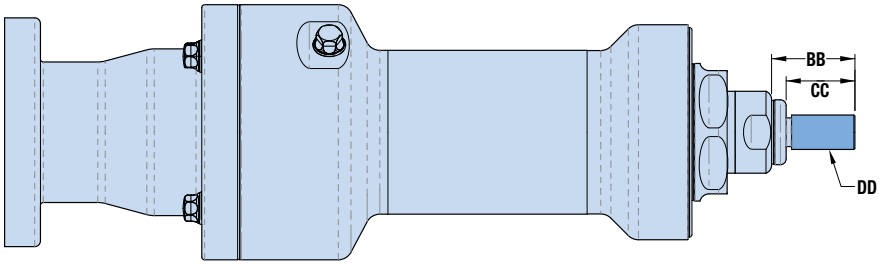

MET	BB	CC	DD
RSH22	29.1	24.00	M12x1.25
RSH25	49.5	44.45	M20x1.5
RSH30	58.4	50.80	M27x2.0

Dimensions in millimeters

IET	BB	CC	DD
RSH22	*1.20*	*1.000*	*1/2-20*
RSH25	*1.70*	*1.500*	*3/4-16*
RSH30	*2.30*	*2.000*	*1-14*

Dimensions in inches

SWITCHES

RSH actuators have 6 switch options: reed, solid state PNP (sourcing) or solid state NPN (sinking); normally open; with flying leads or quick-disconnect.

Commonly used for end-of-stroke positioning, these switches allow clamp-on installation anywhere along the entire actuator length. The internal magnet, located on the thrust tube, is a standard feature. Switches can be installed in the field at any time.

Switches are used to send digital signals to PLC (programmable logic controller), TTL, CMOS circuit or other controller device. Switches contain reverse polarity protection. Solid state QD cables are shielded; shield should be terminated at flying lead end.

All switches are CE rated, IP67 rated and are RoHS compliant. Switches feature bright red or green LED signal indicators.

RoHS COMPLIANT CE

	Order Code	Part Number	Lead	Switching Logic	Power LED	Signal LED	Operating Voltage	**Power Rating (Watts)	Switching Current (mA max.)	Current Consumption	Voltage Drop	Leakage Current	Temp. Range	Shock / Vibration	IP Rating
REED	RY	2190-9082	5m	SPST Normally Open	—	Red	5 - 240 AC/DC	**10.0	100mA	—	3.0 V max.	—	14 to 158°F [-10 to 70°C]	30 G / 9 G	67
	RK	2190-9083	QD*												
SOLID STATE	TY	2190-9088	5m	PNP (Sourcing) Normally Open	—	Green	5 - 30 VDC	**3.0	200mA	8 mA @ 24V	1.0 V max.	0.01 mA max.		50 G / 9 G	
	TK	2190-9089	QD*												
	KY	2190-9090	5m	NPN (Sinking) Normally Open	—	Red									
	KK	2190-9091	QD*												

*QD = Quick-disconnect Enclosure classification IEC 529 IP67 (NEMA 6) CABLES: Robotic grade, oil resistant polyurethane jacket, PVC insulation

⚠ **WARNING: Do not exceed power rating (Watt = Voltage x Amperage). Permanent damage to sensor will occur.

SWITCH INSTALLATION - FIELD REPLACEMENT INSTRUCTIONS

STEP 1:
Loosen screw and nut.

STEP 2:
Place sensor and wrap the band around the RSH cylinder. Position the hook with the nearest hole on the band and mark the hole with a permanent marker.

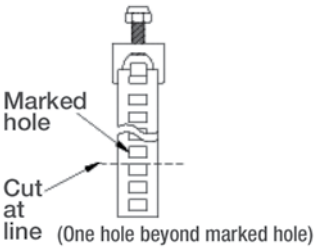

STEP 3:
Remove mounting assembly. Cut the band at the nearest edge of the next hole. (The one that's furthest away from the mounting head.)

STEP 4:
Replace the sensor and mounting assembly. Wrap the band and put the chosen hole on the hook. Position the switch and tighten. Tighten nut for steadying.

SWITCHES

WIRING DIAGRAMS

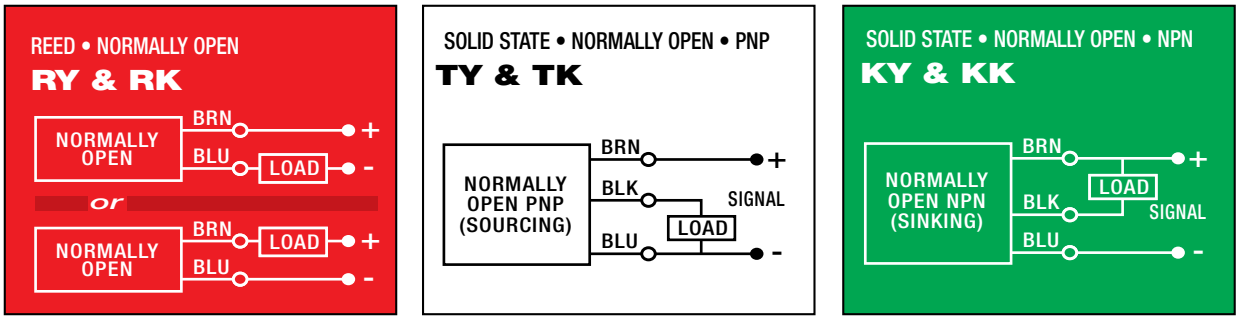

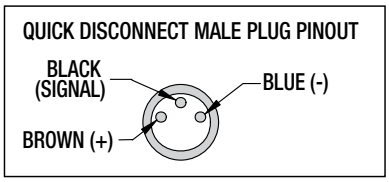

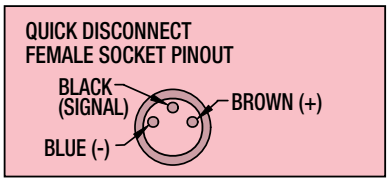

SWITCH DIMENSIONS

☐ Y - direct connect

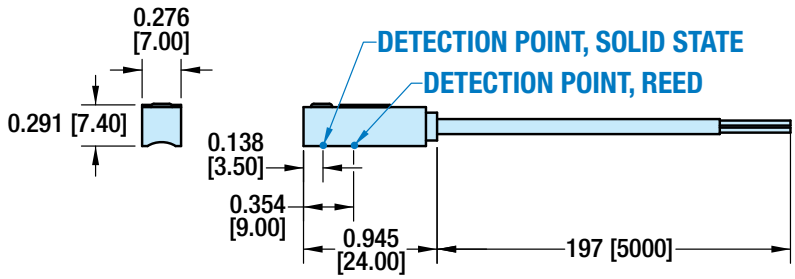

☐ K - QD (Quick-disconnect) switch

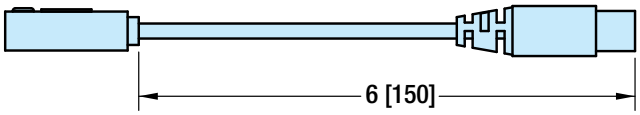

- QD Cable

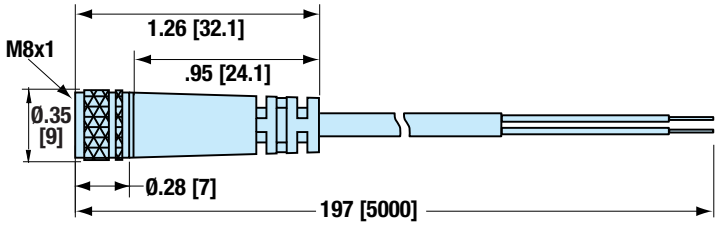

SWITCH CLAMP

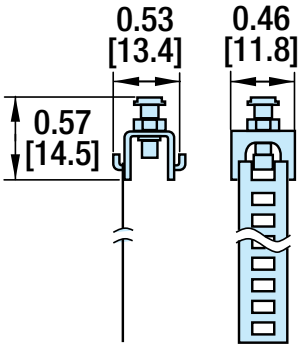

APPLICATION DATA WORKSHEET

Fill in known data. Not all information is required for all applications

ACTUATOR SIZING

ORIENTATION

☐ Horizontal

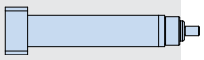

☐ Vertical

☐ Incline °
α _____

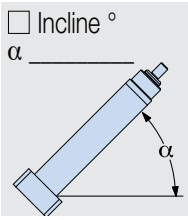

☐

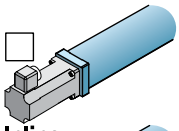

Inline

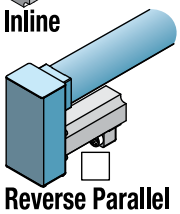

☐

Reverse Parallel

☐ Load supported by actuator OR ☐ Load supported by other mechanism

MOVE PROFILE

EXTEND

Move Distance _____

☐ inch (US conventional) ☐ millimeters (Metric)

Move Time _____ **sec**

Max. Speed _____

☐ in/sec ☐ mm/sec

Dwell Time After Move _____ **sec**

RETRACT

Move Distance _____

☐ inch ☐ millimeters

Move Time _____ **sec**

Max. Speed _____

☐ in/sec ☐ mm/sec

Dwell Time After Move _____ **sec**

NO. OF CYCLES _____

☐ per minute ☐ per hour

HOLD POSITION?

☐ **Required**
☐ **Not Required**

☐ After Move ☐ During Power Loss

NOTE: If load or force changes during cycle use the highest numbers for calculations

EXTEND	RETRACT
LOAD _____	**LOAD** _____
☐ lb. (U.S. Standard) ☐ kg. (Metric)	☐ lb. (U.S. Standard) ☐ kg. (Metric)
FORCE _____	**FORCE** _____
☐ lbf. (U.S. Standard) ☐ N (Metric)	☐ lbf. (U.S. Standard) ☐ N (Metric)

STROKE LENGTH _____

☐ inch (US conventional) ☐ millimeters (Metric)

PRECISION

Repeatability _____

☐ inch ☐ millimeters

OPERATING ENVIRONMENT

Temperature, Contamination, Water, etc.

_____

_____

_____

MOTION PROFILE

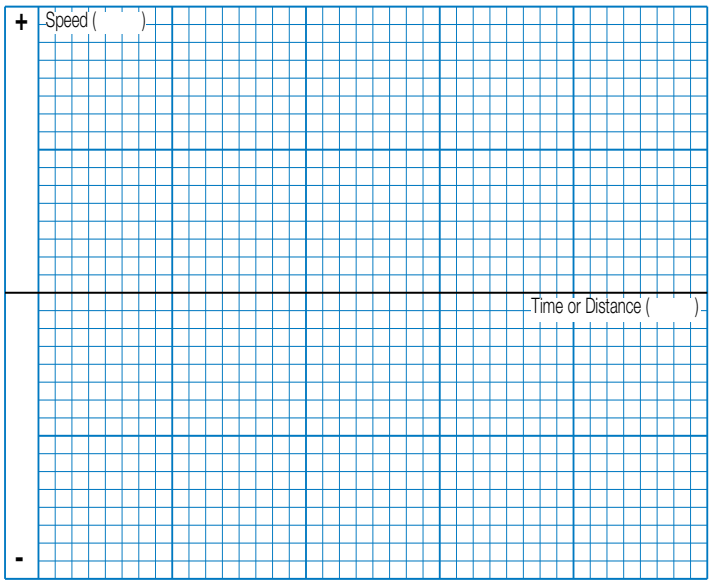

Graph your most demanding cycle, including accel/decel, velocity and dwell times. You may also want to indicate load variations and I/O changes during the cycle. Label axes with proper scale and units.

CONTACT INFORMATION

Name, Phone, Email
Co. Name, Etc.

_____

_____

_____

RSH – Hygienic Rod-Style Actuator

sizeit.tolomatic.com for fast, accurate actuator selection

ACTUATOR SIZING

Selection Guidelines

1 ESTABLISH MOTION PROFILE

Using the application stroke length, desired cycle time, loads and forces, establish the motion profile details including linear velocity and thrust in each of its segments.

2 SELECT ACTUATOR SIZE AND SCREW TYPE

Based on the required velocities and thrust select a size and screw type and lead of the RSH actuator.

3 VERIFY CRITICAL SPEED OF THE SCREW

Verify that the application's peak linear velocity does not exceed the critical speed value for the size and lead of the screw selected.

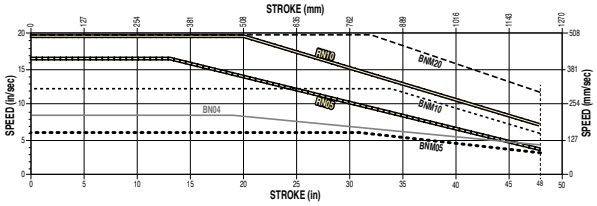

4 VERIFY AXIAL BUCKLING STRENGTH OF THE SCREW

Verify that the peak thrust does not exceed the critical buckling force for the size of the screw selected.

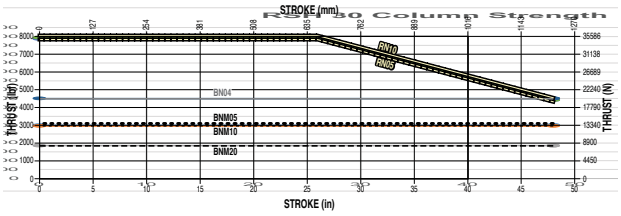

5 ESTABLISH TOTAL TORQUE REQUIREMENTS

Calculate total system inertia. The peak and RMS torque required from the motor to overcome internal friction, external forces and accelerate/decelerate the load.

6 CALCULATE LIFE

Determine the practical load of the system to calculate the L10 estimated life.

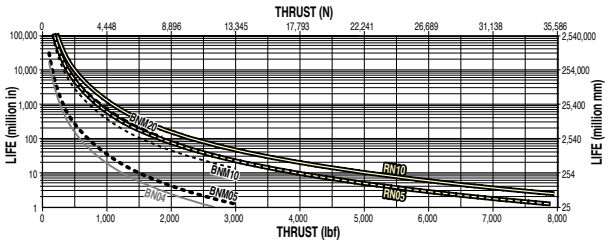

7 SELECT MOUNTING AND SENSOR CHOICES

Mounting options include: TRR trunnion mount, FFG front flange mount, FM2 foot mount. 6 sensor choices include: reed, solid state PNP and solid state NPN, with either flying lead cables or the quick-disconnect cable option. All sensors are normally open.

SERVICE PARTS ORDERING

RSH ACTUATOR REPLACEMENT KITS

Code	Description	RSH SIZE		
		22	25	30
FFG	Front Flange Mount Kit	2122-9020	2125-9020	2130-9020
FM2	* Foot Mount Kit	2122-9021	2125-9021	2130-9021
TRR	*† Trunnion Mount	2122-1042	2125-1042	2125-1042
TRM	*† Trunnion Mount	2122-1041	2125-1041	2125-1041
ERD	RSH to ERD Face Mount Adapter	2122-9019	2125-9019	2130-9019
IET	Imperial Male Thread Adapter	2122-9036	2125-9036	2130-9036
MET	Metric Male Thread Adapter	2122-9035	2125-9035	2130-9035
PSL	Standard Rod Seal Kit	2122-9009	2125-9009	2130-9009
USL	FDA Rod Seal Kit	2122-9010	2125-9010	2130-9010

* REPLACEMENT ONLY † Quantity 1, Trunnion Mount; for pair order 2

RSH SWITCHES

To order switch kits use configuration code for switch preceded by SW and actuator code.

EXAMPLE: S W R S H 2 5 K K

KIT | ACTUATOR | SIZE | SWITCH CODE

The example is for a Solid State NPN, Normally Open switch with Quick-disconnect Coupler. The Switch Kit is complete with Bracket, Set Screw, Switch and mating QD cable.

Code	Lead	Normally	Sensor Type
R Y	5m (197 in)	Open	Reed
R K	Quick-disconnect		
T Y	5m (197 in)	Open	Solid State PNP
T K	Quick-disconnect		
K Y	5m (197 in)	Open	Solid State NPN
K K	Quick-disconnect		

RSH – Hygienic Electric Rod-Style Actuator

ORDERING

RSH 25 RN05 SM152.4 LMI PSL

OPTION ORDERING

ARI FFG KK2 YM___

MODEL

RSH	Rod-Style Actuator

SIZE

22, 25, 30

NUT/SCREW COMBINATIONS

SIZE	CODE	revs/in or lead
22	BNM	05, 10, 20 mm lead
	RN	05, 10 mm lead
25	BN	04 rev/in
	BNM	05, 10, 25 mm lead
	RN	05, 10 mm lead
30	BN	04 rev/in
	BNM	05, 10, 20mm lead
	RN	05, 10 mm lead

STROKE LENGTH

SM___ Enter desired stroke length in millimeters (25.4mm = 1 inch)

MAXIMUM STROKE				
	SN or BN		Roller Nut	
SIZE	*mm*	in	*mm*	in
22	*1000.0*	39.4	*609.6*	24
25	*1000.0*	39.4	*914.4*	36
30	*1219.2*	48	*914.4*	36

Contact Tolomatic with requests for longer strokes

MOTOR MOUNTING

LMI	In-line motor mount
RP1	1:1 ratio, Reverse Parallel motor mount
RP2	2:1 ratio, Reverse Parallel motor mount

SEALING OPTIONS

PSL	Polyurethane/Polyurethane Rod Seals (Standard)
USL	Polyurethane/UHMWPE Rod Seals (Severe Chemicals)

ACTUATOR GUIDE & ANTI-ROTATE

ARI Internal Anti-Rotate

ARI not available for RSH30 RN05, RSH30 RN10

ROD END OPTION

IET	Imperial External (Male) Thread Adapter
MET	Metric External (Male) Thread Adapter

ACTUATOR MOUNTING

FFG*	Front Flange Mount
TRM	Trunnion Mounting, Rear (metric)
TRR	Trunnion Mounting, Rear (US standard)
FM2*	Foot Mount
ERD	RSH to ERD Face Mount Adapter

***NOTE: Foot Mount and Front Flange Mount are shipped together with the actuator but are not installed by Tolomatic.**

SWITCHES**

TYPE	LOGIC	NORMALLY	QUICK-DISCONNECT	CODE	QUANTITY	LEAD LENGTH	
REED	SPST	Open	No	RY	After code enter quantity desired	5 m (16.4 feet)	6 in (152mm) to QD connector w/ 5m lead
			Yes	RK			
SOLID STATE	PNP	Open	No	TY			
			Yes	TK			
	NPN	Open	No	KY			
			Yes	KK			

****NOTE: Switches are shipped together with the actuator but are not installed by Tolomatic.**

YOUR MOTOR HERE

YM____	Motor mount for non-Tolomatic motor. www.tolomatic.com

Available FREE at www.tolomatic.com

Not all codes listed are compatible with all options. Contact Tolomatic with any questions.

The Tolomatic Difference Expect More From the Industry Leader:

Unique linear actuator solutions with Endurance Technology℠ to solve your challenging application requirements.

The fastest delivery of catalog products... Built-to-order with configurable stroke lengths and flexible mounting options.

Online sizing that is easy to use, accurate and always up-to-date. Find a Tolomatic electric actuator to meet your requirements.

Match your motor with compatible mounting plates that ship with any Tolomatic electric actuator.

Easy to access CAD files available in the most popular formats to place directly into your assembly.

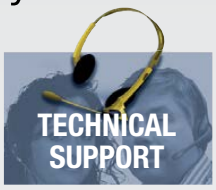

Extensive motion control knowledge: Expect prompt, courteous replies to any application and product questions from Tolomatic's industry experts.

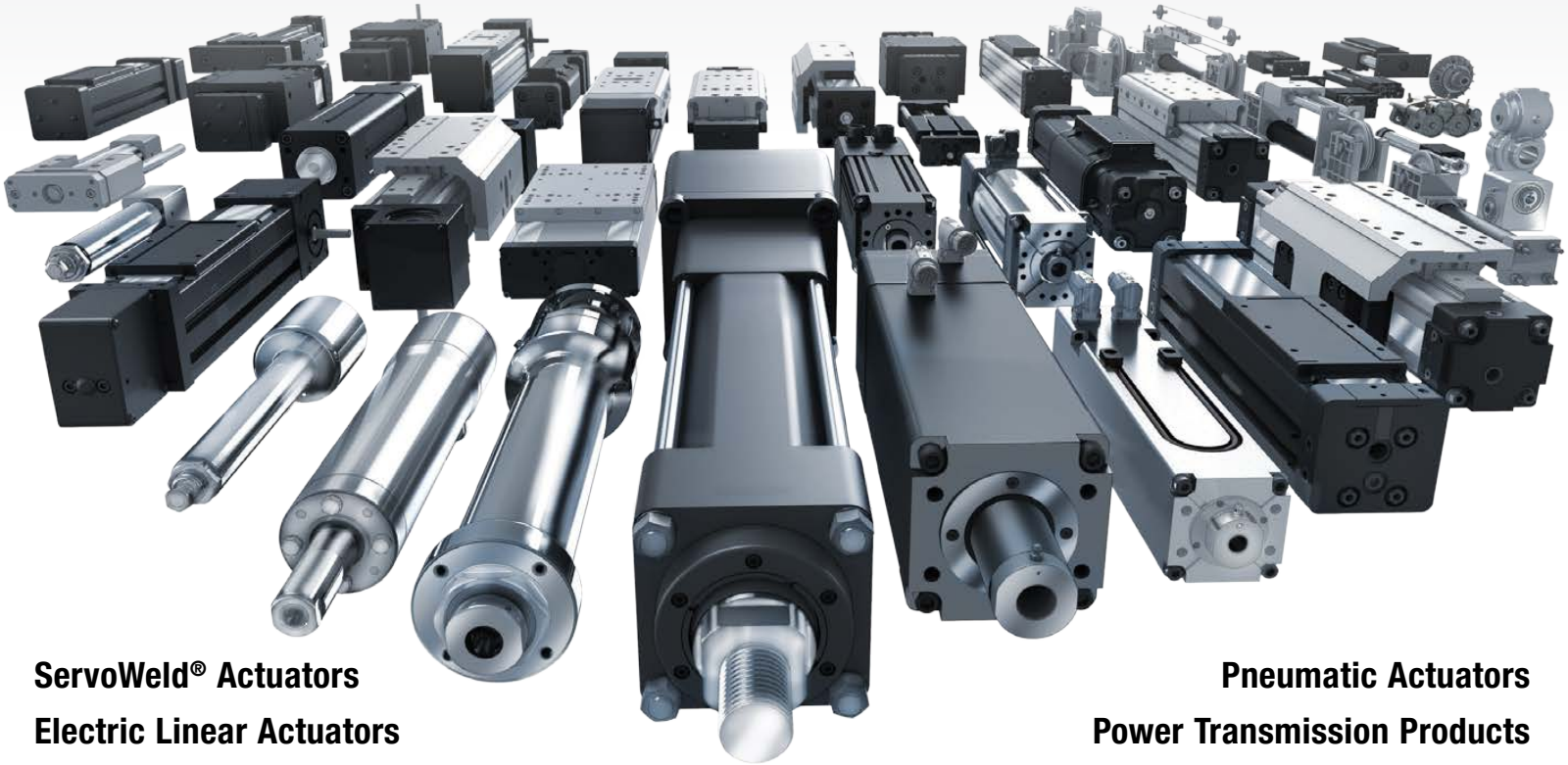

ServoWeld® Actuators

Electric Linear Actuators

Pneumatic Actuators

Power Transmission Products

Tolomatic™
EXCELLENCE *IN MOTION*

COMPANY WITH
QUALITY SYSTEM
CERTIFIED BY DNV GL
= ISO 9001 =
Certified site: Hamel, MN

Sold & Serviced By:

Canadian and International Sales

ELECTROMATE

877-737-8698
sales@electromate.com
www.electromate.com

U.S. Sales

SERVO2GO.com

877-378-0240
sales@servo2go.com
www.servo2go.com